Trimmer Plus

Hedge Trimmer HS720r

OPERATOR'S MANUAL

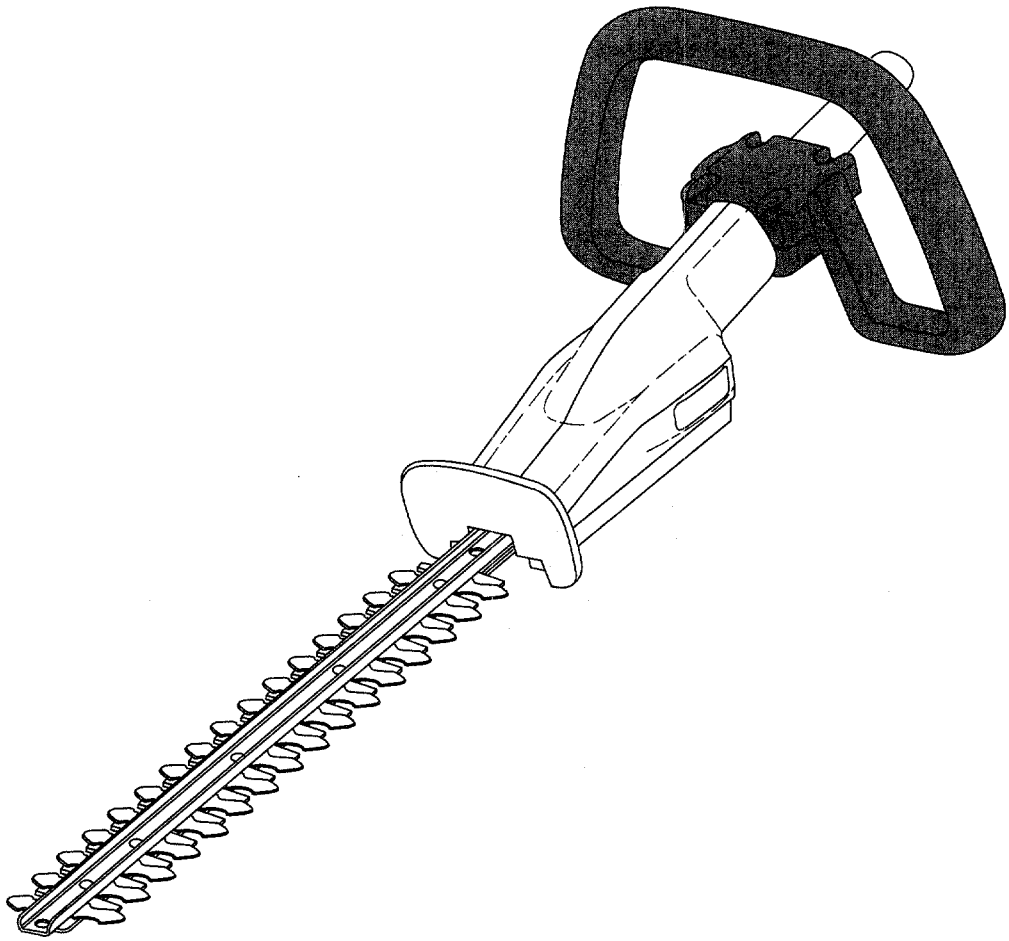

FOR QUESTIONS, CALL 1-800-345-8746 in U.S. or
1-800-668-1238 in CANADA
www.TrimmerPlus.com

IMPORTANT MANUAL **DO NOT THROW AWAY**

INTRODUCTION

THANK YOU

Thank you for buying this quality product. This modern outdoor power tool will provide many hours of useful service. You will find it to be a great labor-saving device. This operator's manual provides you with easy-to-understand operating instructions. Read the whole manual and follow all the instructions to keep your new outdoor power tool in top operating condition.

PRODUCT REFERENCES, ILLUSTRATIONS AND SPECIFICATIONS

All information, illustrations and specifications in this manual are based on the latest product information available at the time of printing. We reserve the right to make changes at any time without notice.

Copyright ©2001 MTD SOUTHWEST INC
All Rights Reserved.

TrimmerPlus® is a registered trademark of
MTD SOUTHWEST INC

SERVICE INFORMATION

Service on this unit both within and after the warranty period should be performed only by an authorized and approved service dealer.
Dial:

- **1-800-345-8746** in the United States

Or

- **1-800-668-1238** in Canada to obtain the listing of the authorized service dealer nearest you.

DO NOT RETURN THE UNIT TO THE RETAILER.

NOTE: PROOF OF PURCHASE WILL BE REQUIRED FOR WARRANTY SERVICE.

Make sure this manual is carefully read and understood before starting or operating this equipment.

THIS PRODUCT IS COVERED BY ONE OR MORE US PATENTS. OTHER PATENTS PENDING.

TABLE OF CONTENTS

I. Rules for Safe Operation 3-6
A. Important Safety Information 3-4
B. Safety and International Symbols 5
C. Know Your Unit 6

II. Operating Instructions 7-8
A. Assembling the Coupler 7
B. Preparing for Operation 8
C. Operating Tips 8

III. Maintenance and Repair Instructions 9-11
A. Lubricating Cams 9
B. Blade Replacement 9
C. Lubricating Blade 10
D. Storage 11
E. Transporting 11
F. Accessories/Replacement Parts 11

IV. Specifications 11

V. Warranty 12

CONTENTS OF CARTON

This unit should consist of the following:

- HS720r Hedge Trimmer Add-On
- Hanger
- Operator's Manual
- Product Registration Card
- Optional Scabbard

NOTE: This product has been rated for use on both gas and electric powerheads.

WARNING!

Read the Operator's Manual(s) and follow all warnings and safety instructions. Failure to do so can result in serious injury to the operator and/or bystanders.

RULES FOR SAFE OPERATION

The purpose of safety symbols is to attract your attention to possible dangers. The safety symbols, and their explanations, deserve your careful attention and understanding. The safety warnings do not by themselves eliminate any danger. The instructions or warnings they give are not substitutes for proper accident prevention measures.

SYMBOL	MEANING
⚠	**SAFETY ALERT SYMBOL:** Indicates danger, warning, or caution. Attention is required in order to avoid serious personal injury. May be used in conjunction with other symbols or pictographs.

NOTE: Advises you of information or instructions vital to the operation or maintenance of the equipment.

⚠ **DANGER:** Failure to obey a safety warning will result in serious injury to yourself or to others. Always follow the safety precautions to reduce the risk of fire, electric shock, and personal injury.

⚠ **WARNING:** Failure to obey a safety warning can result in injury to yourself and others. Always follow the safety precautions to reduce the risk of fire, electric shock, and personal injury.

⚠ **CAUTION:** Failure to obey a safety warning may result in property damage or personal injury to yourself or to others. Always follow the safety precautions to reduce the risk of fire, electric shock, and personal injury.

RULES FOR SAFE OPERATION

• IMPORTANT SAFETY INFORMATION •

READ ALL INSTRUCTIONS

WARNING: When using the unit, the safety rules must be followed. For your own safety and that of bystanders, please read these instructions before operating the unit. Please keep the instructions safe for later use.

BEFORE OPERATING

- Carefully read and understand the operator's manual of the unit that powers this attachment.
- Read this operating instruction manual carefully. Be thoroughly familiar with the controls and the proper use of the equipment. Know how to stop the unit and disengage the controls quickly.
- Do not operate this unit when tired, ill, or under the influence of alcohol, drugs, or medication.
- Never allow children to operate the equipment. Never allow adults unfamiliar with the instructions to use the unit. Never allow adults to operate the equipment without proper instruction.
- All guards and safety attachments must be installed properly before operating the unit.
- Inspect the unit before use. Ensure the blade is installed correctly and secure.
- Clear the area to be hedged before each use. Remove all objects such as rocks, broken glass, nails, wire, or string which can be thrown or become entangled in the hedge trimmer attachment.

SAFETY WARNINGS FOR GAS POWERHEADS AND HEDGE TRIMMERS

WARNING: Gasoline is highly flammable, and its vapors can explode if ignited. Take the following precautions:

- Store fuel only in containers specifically designed and approved for the storage of such materials.
- Always stop the engine and allow it to cool before filling the fuel tank. Never remove the cap of the fuel tank, or add fuel, when the engine is hot. Never operate the unit without the fuel cap securely in place. Loosen the fuel tank cap slowly to relieve any pressure in the tank.
- Mix and add fuel in a clean, well-ventilated area outdoors where there are no sparks or flames. Slowly remove the fuel cap only after stopping engine. Do not smoke while fueling or mixing fuel. Wipe up any spilled fuel from the unit immediately.
- Avoid creating a source of ignition for spilled fuel. Do not start the engine until fuel vapors dissipate.
- Move the unit at least 30 feet (9.1 m) from the fueling source and site before starting the engine. Do not smoke. Keep sparks and open flames away from the area while adding fuel or operating the unit.
- Never start or run the unit inside a closed room or building. Breathing exhaust fumes can kill. Operate this unit only in a well ventilated area outdoors.

SAFETY WARNINGS FOR ELECTRIC POWERHEADS AND HEDGE TRIMMERS

WARNING: To reduce the risk of electrical shock, use only extension cords approved for outdoor use, such as an extension cord of cord type SW-A, SOW-A, STW-A, STOW-A, SJW-A, SJOW-A, SJTW-W or SJTOW-A. Extension cords are available from your local retailer. Use only round-jacketed extension cords approved for outdoor use.

- CORD SETS: Make sure your cord set is in good condition. When using a cord set, be sure to use a cord that is heavy enough to carry the current that your unit will draw. An undersized cord set will cause a drop in line voltage resulting in loss of power and overheating. See the operator's manual for the unit that will power this add-on for the recommended cord size.
- Inspect all extension cords and the unit power connection periodically. Look closely for deterioration, cuts or cracks in the insulation. Also inspect the connections for damage. Replace the cords if any defects or damage appear.
- Prevent disconnection of the hedge trimmer powerhead from extension cord during operation by using a plug-receptacle retaining strap, connector, or by making a knot as shown below:

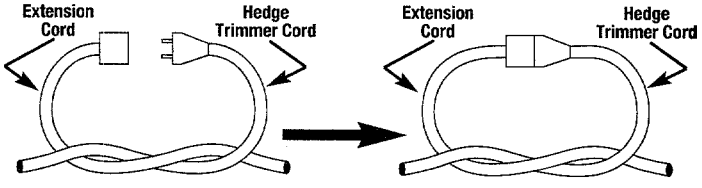

- Avoid dangerous environments. Never operate your unit in damp or wet conditions. Moisture is a shock hazard.
- Do not use the unit in the rain. Do not use in or around water. Do not use on wet hedges or shrubbery.
- Do not handle the plug or unit with wet hands or standing on any wet surfaces.
- Do not leave the unit plugged in when not in use, changing attachments or add-ons, or while being serviced.

DANGER: RISK OF CUT OR SHOCK — Keep hands away from blades. Keep one hand on assist handle on the powerhead or on the loop handle of attachment when power is on. Do not attempt to remove cut material or hold material to be cut when blades are moving. Make sure the switch on the power unit is off when clearing jammed material from blades. Do not grasp the exposed cutting blades or cutting edges of the hedge trimmer. Wear gloves when handling the blade.

RULES FOR SAFE OPERATION

WHILE OPERATING

- Keep bystanders, especially children and pets, at least 50 ft (15 m) away.
- Wear safety glasses or goggles that are marked as meeting ANSI Z87.1 standards, and ear/hearing protection when operating this unit. Wear a face or dust mask if the operation is dusty.
- Wear heavy, long pants, boots, gloves and a long sleeve shirt. Do not wear loose clothing, jewelry, short pants, sandals or go barefoot. Secure hair above shoulder level.
- Use the unit only in daylight or good artificial light.
- Use hedge trimmer properly. Only use this tool for the purpose intended. Use only for trimming the type of shrub, growth, etc., described in the operating instructions.
- Do not force unit. It will do the job better and with less likelihood of injury at a rate for which it was designed.
- Use extreme caution when reversing or pulling the unit towards you.
- Do not overreach, take extra care when working on steep slopes or inclines. Always keep proper footing and balance.
- DO NOT stand on an unstable support. Do not use on a ladder.
- Always hold the unit with both hands when operating. Keep a firm grip on both the front and rear handle or grips.
- Keep hands, face, and feet at a distance from all moving parts. Do not touch or try to stop the blades when they are moving.

CAUTION: Blades will coast after powerhead is in the "off" position.

- Do not operate the engine faster than the speed needed to do the job. Do not run the engine at high speed when not in use.
- Always stop the engine/motor when operation is delayed or when walking from one location to another.
- Stop the engine/motor for maintenance, repair, to install or remove the blades. The unit must be stopped and the blades no longer moving to avoid injury.
- Always wear heavy gloves when handling, removing, installing or cleaning the blades.
- If you strike or become entangled with a foreign object, stop the engine/motor immediately and check for damage. Have any damage repaired before attempting further operations.
- Stop the unit IMMEDIATELY if you feel excessive vibration. Vibration is a sign of trouble. Inspect thoroughly for loose nuts, bolts or damage before continuing. Repair or replace affected parts as necessary.
- Stop and switch the unit to off for maintenance, repair, or for changing add-ons or other attachments.
- Maintain hedge trimmer with care. Keep blades sharp at all times, and clean for best and safest performance. Follow maintenance instructions. Always use a clean cloth when cleaning. Never use brake fluid, gasoline, petroleum-based products, or any strong solvents to clean your unit.
- Use only genuine MTD replacement parts and accessories for this unit. These are available from your authorized service dealer. Use of any non-MTD parts or accessories could lead to serious injury to the user or damage to the unit, and void your warranty.

OTHER SAFETY WARNINGS

- Allow the unit to cool before storing or transporting. Be sure to secure the unit while transporting.
- Store the unit in a locked up and dry or high and dry place to prevent unauthorized use or damage, out of the reach of children.
- Never douse or squirt the unit with water or any other liquid. Keep handles dry, clean and free from debris. Clean after each use.
- Keep these instructions. Refer to them often and use them to instruct other users. If you loan someone this unit, also loan them these instructions.
- Only qualified personnel should perform any repairs or maintenance procedures that are not described in this manual.
- Check engine mounting bolts and other bolts at frequent intervals for proper tightness to be sure the equipment is in safe working condition.
- Inside a building store the machine away from ignition sources. Allow the engine to cool before storing in any enclosure.
- Always refer to the Operator's Manual instructions for important details if the unit is to be stored for an extended period.
- Do not attempt to repair the machine unless you have the proper tools, and instructions for disassembly and repair of the machine.

SAVE THESE INSTRUCTIONS

RULES FOR SAFE OPERATION

SAFETY AND INTERNATIONAL SYMBOLS

This operator's manual describes safety and international symbols and pictographs that may appear on this product. Read the operator's manual for complete safety, assembly, operating and maintenance and repair information.

SYMBOL **MEANING**

- **SAFETY ALERT SYMBOL**

  Indicates danger, warning, or caution. May be used in conjunction with other symbols or pictographs.

- **WARNING - READ OPERATOR'S MANUAL**

  Read the Operator's Manual(s) and follow all warnings and safety instructions. Failure to do so can result in serious injury to the operator and/or bystanders.

- **WEAR EYE AND HEARING PROTECTION**

  WARNING: The operation of any power tool can be the source of thrown objects and loud noise which can cause severe eye injury and hearing loss. Always wear safety glasses or goggles eye protection meeting ANSI Z87.1 standards and ear protection when operating this unit. Use a full face shield when needed.

- **KEEP BYSTANDERS AWAY**

  WARNING: Keep all bystanders, especially children and pets, at least 50 feet (15 m) from the operating area.

- **THROWN OBJECTS CAN CAUSE SEVERE INJURY**

  WARNING: Do not operate unit without proper attachments and guards in place.

- **KEEP HANDS AWAY FROM BLADES**

  MOVING BLADES CAN CAUSE SEVERE INJURY. Do not put hands on blades when starting the engine or while operating hedge trimmer attachment.

- **ATTACHMENT IS HOT!**

  Surface of attachment is hot. To avoid serious injury, do not hold attachment while operating. Use designated handles only.

KNOW YOUR UNIT

APPLICATIONS

With Hedge Trimmer Add-On:

- Trimming hedges and shrubs.

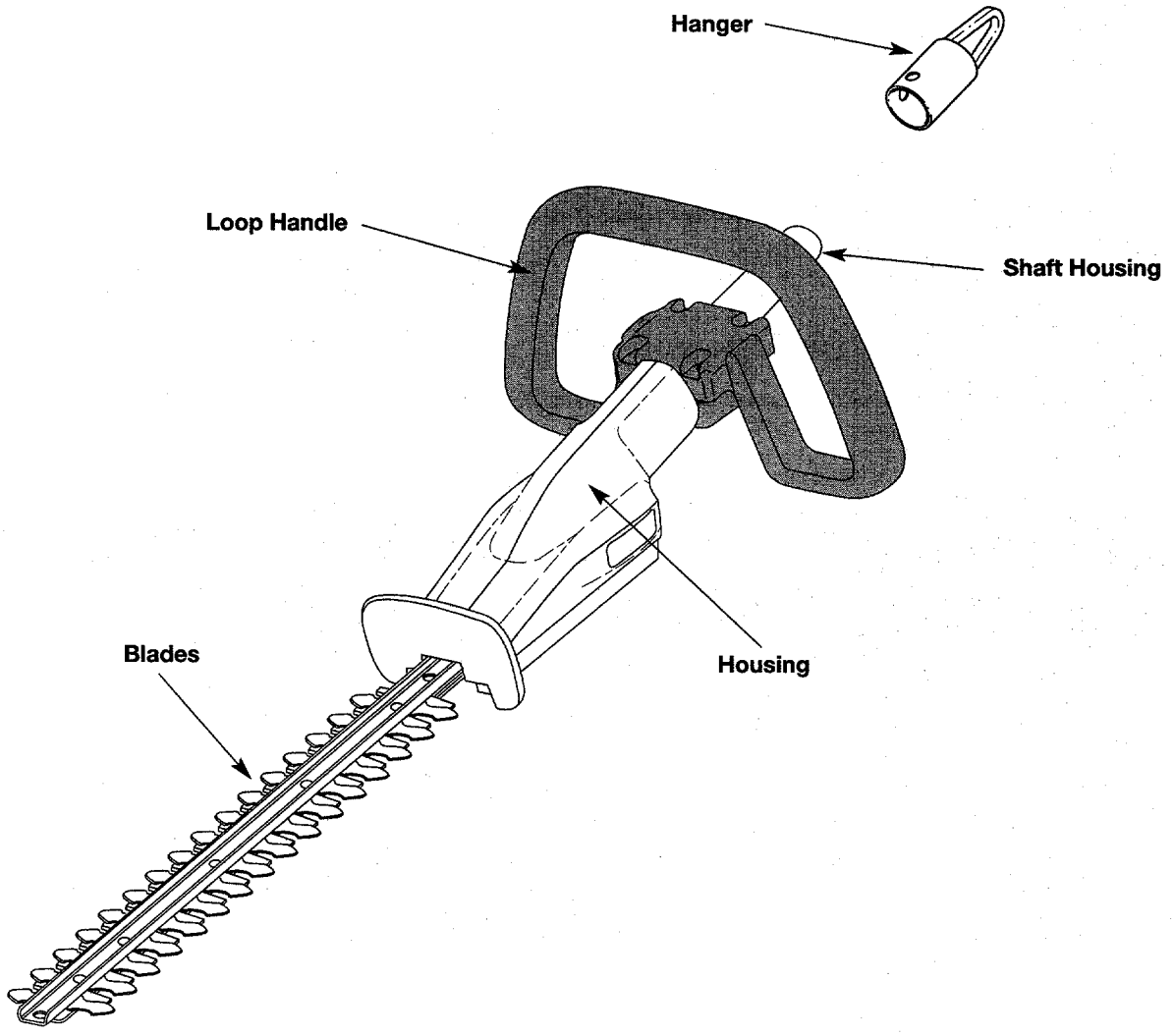

ASSEMBLING THE COUPLER

The TrimmerPlus® system enables the use of these optional add-ons.

Blower/Vacuum BV720r
Cultivator GC720r
Edger LE720r
Sweeper/Blower SB720r
Straight Shaft Trimmer SS725r
Snow Thrower ST720r
Turbo Blower TB720r
Tree Pruner TP720r

WARNING: Read and understand operator's manual for unit to be used with this add-on prior to operation.

Removing the add-on:

1. Turn the knob counterclockwise to loosen (Fig. 1).
2. Press and hold the release button (Fig. 1).
3. While firmly holding the upper shaft housing, pull the snow thrower attachment out of the coupler (Fig. 2).

Installing the add-on:

WARNING: To avoid serious personal injury and damage to the unit, shut unit off before removing or installing add-ons.

NOTE: To make installing or removing the add-on easier, place the unit on the ground or on a work bench.

1. Remove the hanger from the top of the shaft housing.
2. Turn knob counterclockwise to loosen (Fig. 1).
3. While firmly holding the add-on, push it straight into the coupler (Fig. 2).

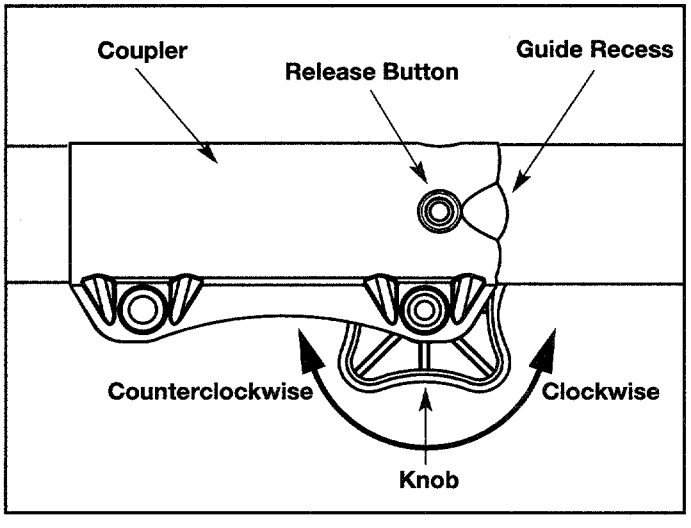

Fig. 1

NOTE: Aligning the release button with the guide recess will help installation (Fig. 1).

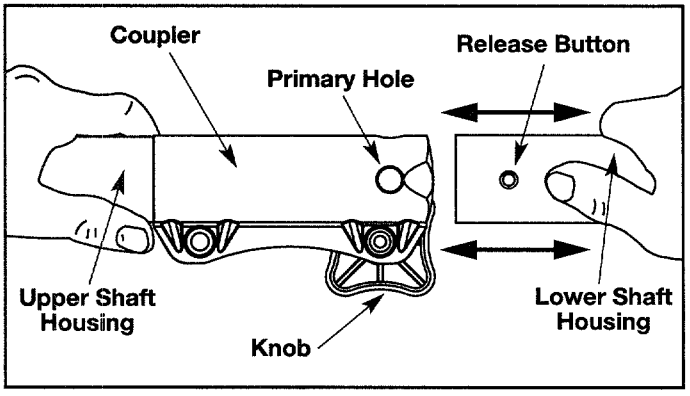

Fig. 2

3. Turn the knob clockwise to tighten (Fig. 3).

CAUTION: Lock the release button in the primary hole (Fig. 2) and securely tighten the knob before operating this unit.

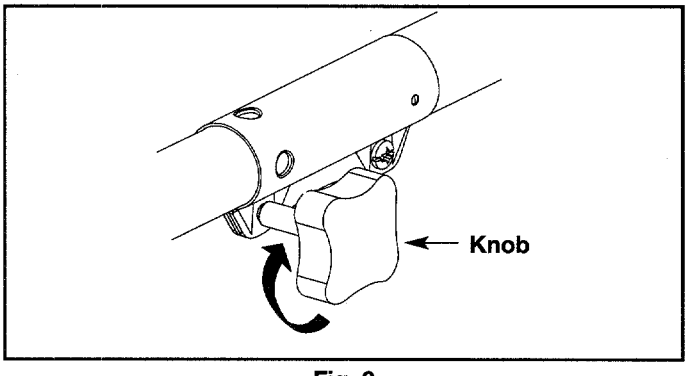

Fig. 3

CAUTION: The add-ons with the coupler system are to be used in the primary hole only. Using the wrong hole could lead to personal injury or damage to the unit.

The hedger trimmer add-on should be installed with the release button in the **primary hole**.

Check Flex Shaft Engagement Prior to Using

1. Start the unit.
2. Briefly engage and release the trigger.
3. Check that add-on is operating.
4. If the add-on is not operating, remove add-on and repeat steps for installing the add-on.
5. Recheck operation of add-on attachment.

OPERATING INSTRUCTIONS

PREPARING FOR OPERATION

For ease of operation, your hedge trimmer has a loop handle. For ease of operation and best balance of the unit. we recommend that you use the loop handle on the hedge trimmer attachment rather than the assist handle on the powerhead (Fig. 4).

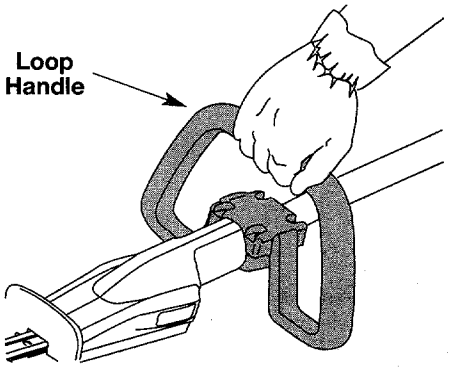

Fig. 4

CAUTION: Do not use any part of the housing as a gripping surface.

CAUTION: Do not operate if blade guard breaks or gets damaged.

WARNING: Check loop handle before each use. Make sure it is securely fastened to your hedge trimmer attachment before using.

WARNING: If any parts are missing, damaged, or broken, do not operate your hedge trimmer until they have been replaced. Failure to do so could result in possible serious personal injury.

WARNING: Keep hands and fingers away from moving parts. Any part of body coming in contact with moving parts could result in serious injury.

DANGER: If blade jams on any electrical cord or line, DO NOT TOUCH THE BLADE! IT CAN BECOME ELECTRICALLY LIVE AND VERY DANGEROUS. Release the unit in the safest manner possible, and turn off power source.

OPERATING TIPS

NOTE: Do not operate unit with the hedge trimmer attachment at full engine speed. Best performance occurs at 1/2 to 3/4 speed.

1. Wear gloves when trimming thorny or prickly growth. When trimming new growth, use a wide sweeping action, so that the stems are fed directly into the cutting blade. Older growth will have thicker stems and will be trimmed easiest by using a sawing movement. Do not try to cut stems that are larger than 3/8 inch thick, or those obviously too large to feed into the cutting blade. Use a non-powered hand saw or pruning saw to trim large stems.
2. If desired, you can use a string to help cut your hedge level. Decide how high you want the hedge. Then, stretch a piece of string along the hedge at this height. Trim the hedge just above this guide line of string (Fig. 5). Trim the side of a hedge so that it will be slightly narrower at the top (Fig. 6). More of the hedge will be exposed when shaped this way, and be more uniform.

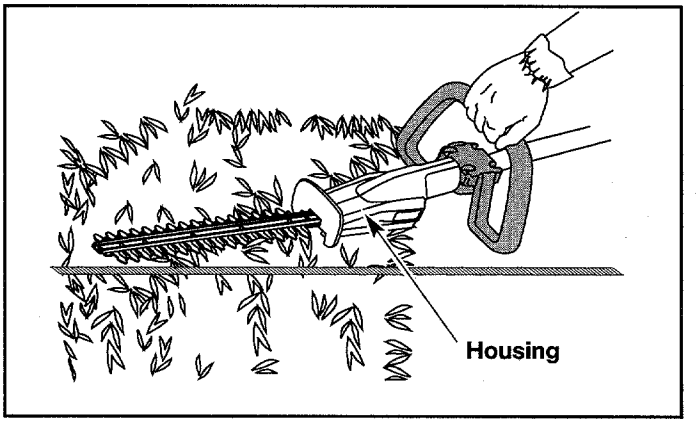

Fig. 5

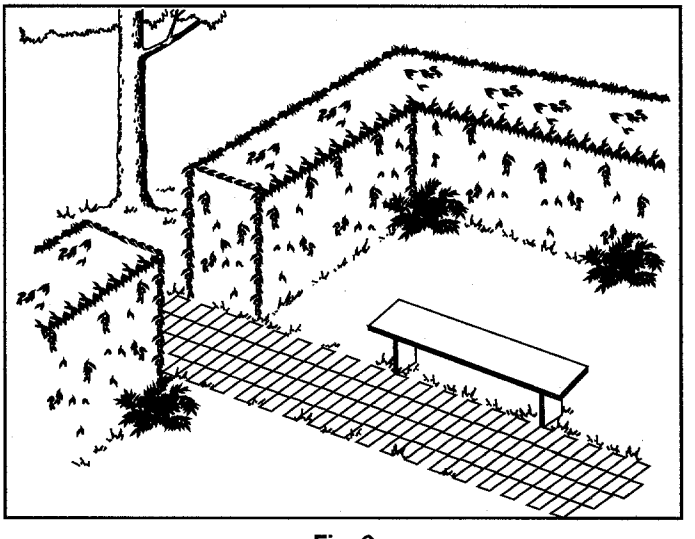

Fig. 6

IMPORTANT!

LUBRICATING CAMS

The cams are lubricated with a sufficient amount of high-temperature grease. To keep the attachment operating efficiently, apply a high-temperature grease to the cams, and in between the yokes every 6 hours of use. (Fig. 7)

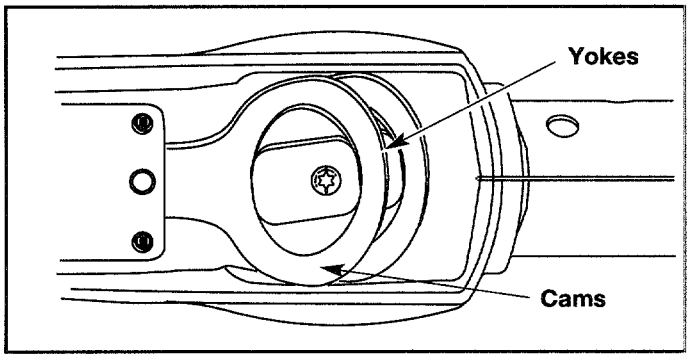

Fig. 7

WARNING: Failure to apply high-temperature grease every 6 hours of operation can result in failure of cams and blade, and will void your warranty.

BLADE REPLACEMENT

NOTE: We recommend that you take the hedge trimmer attachment to your nearest authorized service dealer to replace the blade.

NOTE: Disconnect the hedge trimmer attachment from the powerhead before replacing the blade.

REMOVING BLADE

WARNING: Blades are sharp. When handling blade assembly, do not place your hand or fingers between blades or in any position where they could get pinched or cut.

1. Place hedge trimmer upside down on workbench and remove two (2) bottom plate screws (Fig. 8).
2. Remove bottom plate.

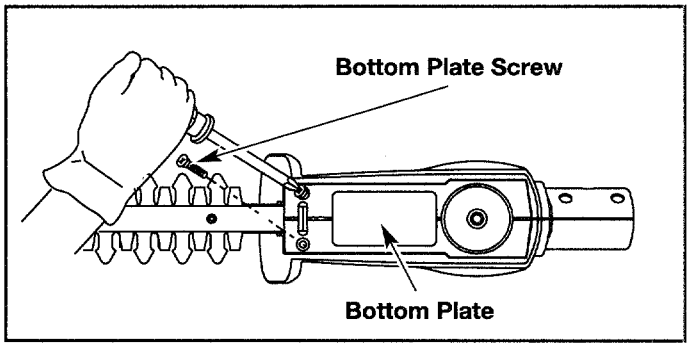

Fig. 8

3. Align the cams (Fig. 9).
4. Remove the four (4) blade screws (Fig. 9).

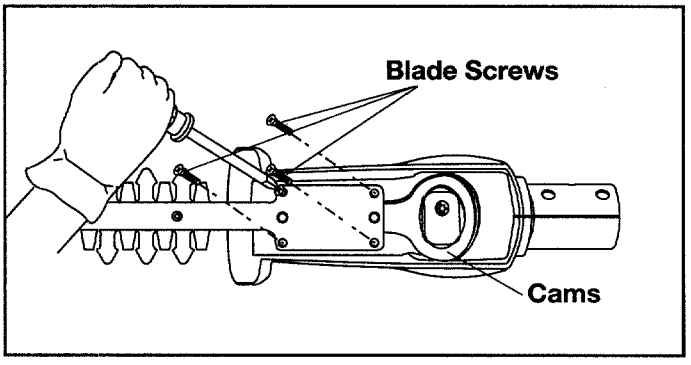

Fig. 9

5. Push the red end of the blade bar towards the cams. This will loosen the blade plate so that it can be removed easily from the cams (Fig. 10).

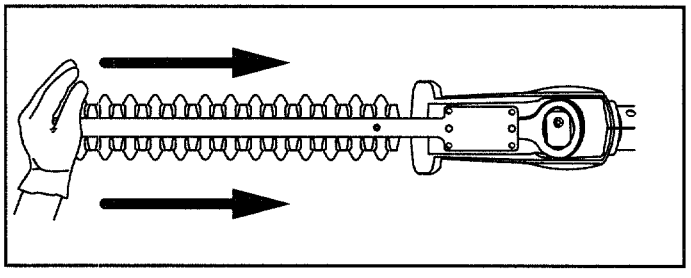

Fig. 10

6. Remove the blade by lifting and rotating it so that the blade yokes clears the lower cam first (Fig. 11).

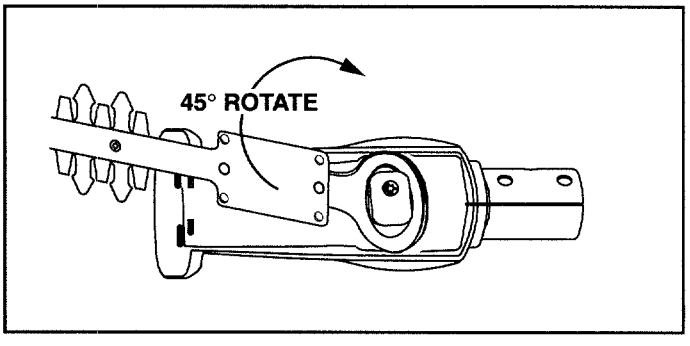

Fig. 11

7. Squeeze the yokes and remove the blade from the housing (Fig. 12).

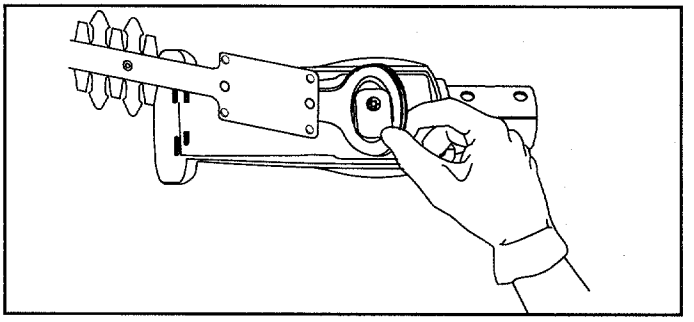

Fig. 12

INSTALLING BLADE

WARNING: Blades are sharp. When handling blade assembly, do not place your hand or fingers between blades or in any position where they could get pinched or cut.

WARNING: To prevent serious injury, wear gloves when removing or installing the blade.

1. Slide the blade plate all the way forward towards the yokes (Fig. 13). The red end of the bar should be covered by the blade plate.
2. Align the cams (see Fig. 9).
3. Place new blade into the housing and squeeze the yoke to drop it into place (see Fig. 12).
4. Rotate the blade so that it drops past the lower cam (see Fig. 11).
5. Install the four (4) blade screws. Torque screws to **10-15 in•lbs.**

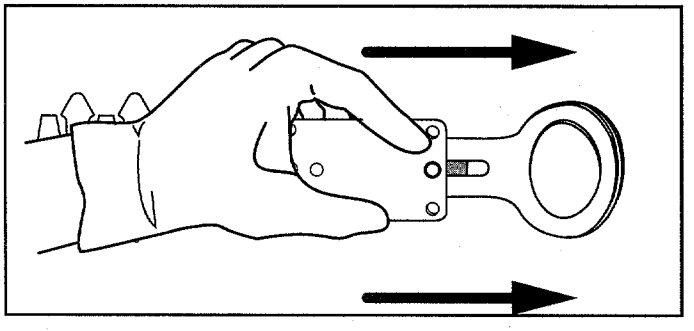

Fig. 13

6. Install the bottom plate lip into the slot of the housing (Fig. 14). Install the two (2) bottom plate screws. Torque screws to **10-15 in•lbs.**

NOTE: If binding occurs after replacing the blade assembly, repeat the steps under **Removing Blade** and **Installing Blade.**

WARNING: When servicing, use only identical OEM replacement parts. Use of any other parts may create a hazard or cause product damage.

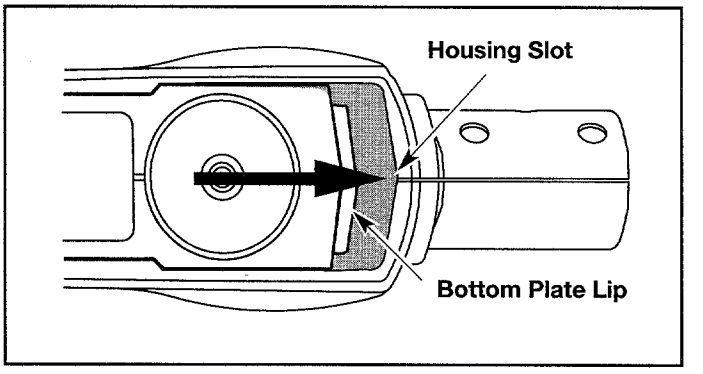

Fig. 14

LUBRICATING BLADE

1. For easier operation and longer blade life, lubricate the hedge trimmer attachment blade before and after each use. Before lubricating, be sure the switch is in the OFF position on the powerhead. Apply light machine oil along the edge of the top strap (Fig. 15).
2. Occasionally, you should oil your hedge trimmer attachment during use. Before oiling, stop hedge trimmer, then oil. You then can resume trimming. Do not oil while hedge trimmer attachment is running.

NOTE: Avoid using solvents when cleaning plastic parts. Most plastics are susceptible to damage from various types of commercial solvents, and may be damaged by their use. Use clean cloths to remove dirt, carbon dust, etc.

NOTE: Only the parts shown on the parts list, page 9, are intended to be repaired or replaced by the customer.

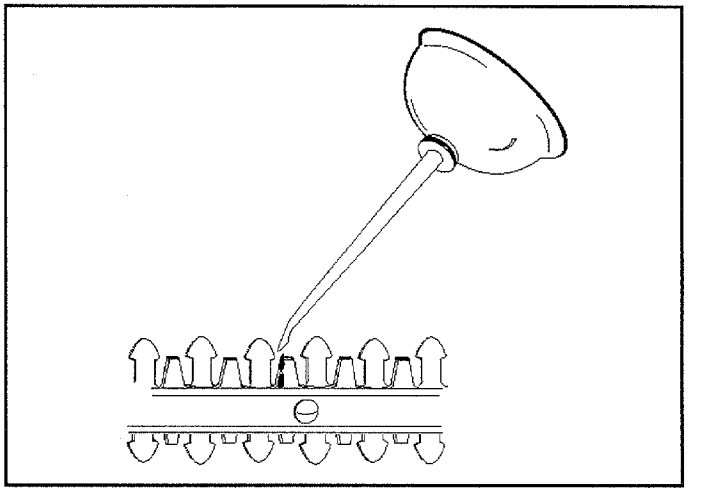

Fig. 15

MAINTENANCE AND REPAIR INSTRUCTIONS

STORAGE

- Check unit before storage to be sure the equipment is in safe working condition.
- Stop the engine or motor.
- Store the unit indoors, in a dry and locked place, out of the reach of children.
- Maintain or replace safety and instruction labels, as necessary.

For gas powerhead units:

- Allow the unit to cool before storing in any enclosure.
- Drain fuel from unit. Never store the unit with fuel in the fuel tank inside a building where ignition sources are present such as hot water and space heaters, clothes dryers, etc.

TRANSPORTING

- Allow the unit to cool before transporting.
- Secure the unit while transporting.

For gas powerhead units:

- Drain fuel from unit.
- Tighten fuel cap before transporting.

ACCESSORIES/REPLACEMENT PARTS

Replacement Blade 791-181660
Blade Screws (4 required) 791-181827
Loop Handle Assembly 791-180869
Handle Mounting Hardware
(4 screws, 4 nuts) 791-180870
Bottom Plate 791-181849
Bottom Plate Screws (2 required) 791-181827

Use only original MTD replacement parts.

SPECIFICATIONS

CUTTING HEAD

Attachment Weight . . . . . 4.625 lbs (2.10 kg)
Cutting Mechanism . . . . . .Dual Action
Blade Length . . . . . 16 inches (40.64 cm)
Drive Shaft Housing . . . . . .Steel Tube

MANUFACTURER'S LIMITED WARRANTY FOR:

TrimmerPlus®

The limited warranty set forth below is given by MTD SOUTHWEST INC ("MTD") with respect with new merchandise purchased and used in the United States, its possessions and territories.

MTD warrants this product against defects in material and workmanship for a period of two (2) years commencing on the date of original purchase and will, at its option, repair or replace, free of charge, any part found to be defective in material or workmanship. This limited warranty shall only apply if this product has been operated and maintained in accordance with the Operator's Manual furnished with the product, and has not been subject to misuse, abuse, commercial use, neglect, accident, improper maintenance, alteration, vandalism, theft, fire, water, or damage because of other peril or natural disaster. Damage resulting from the installation or use of any accessory or attachment not approved by MTD for use with the product(s) covered by this manual will void your warranty as to any resulting damage.

This warranty is limited to ninety (90) days from the date of original retail purchase for any MTD product that is used for rental or commercial purposes, or any other income-producing purpose.

HOW TO OBTAIN SERVICE: Warranty service is available, WITH PROOF OF PURCHASE THROUGH YOUR LOCAL AUTHORIZED SERVICE DEALER. To locate the dealer in your area, please check for a listing in the Yellow Pages or contact the Customer Service Department of MTD SOUTHWEST INC by calling 1-800-345-8746 or writing to 550 N. 54th Street, Chandler, Arizona 85226 or if in Canada call 1-800-668-1238. No product returned directly to the factory will be accepted unless prior written permission has been extended by the Customer Service Department of MTD SOUTHWEST INC.

This limited warranty does not provide coverage in the following cases:

A. Wear items - Bump Knobs, Outer Spools, Cutting Line, Inner Reels, Starter Pulley, Starter Ropes, Drive Belts

B. MTD does not extend any warranty for products sold or exported outside of the United States of America, its possessions and territories, except those sold through MTD's authorized channels of export distribution

MTD reserves the right to change or improve the design of any TrimmerPlus® Product without assuming any obligation to modify any product previously manufactured.

No implied warranty, including any implied warranty of merchantability or fitness for a particular purpose, applies after the applicable period of express written warranty above as to the parts as identified. No other express warranty or guaranty, whether written or oral, except as mentioned above, given by any person or entity, including a dealer or retailer, with respect to any product shall bind MTD. During the period of the Warranty, the exclusive remedy is repair or replacement of the product as set forth above. (Some states do not allow limitations on how long an implied warranty lasts, so the above limitation may not apply to you.)

The provisions as set forth in this Warranty provide the sole and exclusive remedy arising from the sales. MTD shall not be liable for incidental or consequential loss or damages including, without limitation, expenses incurred for substitute or replacement lawn care services, for transportation or for related expenses, or for rental expenses to temporarily replace a warranted product. (Some states do not allow limitations on how long an implied warranty lasts, so the above limitation may not apply to you.)

In no event shall recovery of any kind be greater than the amount of the purchase price of the product sold. Alteration of the safety features of the product shall void this Warranty. You assume the risk and liability for loss, damage, or injury to you and your property and/or to others and their property arising out of the use or misuse or inability to use the product.

This limited warranty shall not extend to anyone other than the original purchaser, original lessee or the person for whom it was purchased as a gift.

How State Law Relates to this Warranty: This warranty gives you specific legal rights, and you may also have other rights which vary from state to state.

To locate your nearest service dealer dial
1-800-345-8746 in the United States or
1-800-668-1238 in Canada.

MTD SOUTHWEST INC
550 N. 54th Street
Chandler, AZ 85226 U.S.A.

SAVE THESE INSTRUCTIONS FOR FUTURE REFERENCE.

FOR QUESTIONS CALL 1-800-345-8746 IN U.S.
OR 1-800-668-1238 IN CANADA

OPERATOR'S MANUAL PART NO. 792-10766
PRINTED IN U.S.A.

REV. P00
11/01